Havarikommissionen
Accident Investigation Board Denmark

Bulletin 2020-329

Serious incident to OY-LUN (Champion 8KCAB) in Roskilde Terminal Control Area on 10-9-2020.

ISSUED SEPTEMBER 2021

INTRODUCTION

This bulletin reflects the opinion of the Danish Accident Investigation Board regarding the circumstances of the occurrence and its causes and consequences.

In accordance with the provisions of EU Regulation 996/2010, the Danish Air Navigation Act and pursuant to Annex 13 of the International Civil Aviation Convention, the safety investigation is of an exclusively technical and operational nature, and its objective is not the assignment of blame or liability.

The safety investigation was carried out without having necessarily used legal evidence procedures and with no other basic aim than preventing future accidents and serious incidents.

Consequently, any use of this bulletin for purposes other than preventing future accidents and serious incidents may lead to erroneous or misleading interpretations.

CONTENTS

GENERAL

State file number:	2020-329
UTC date:	14:30
UTC time:	10-9-2020
Occurrence class:	Serious incident
Location:	Roskilde Terminal Control Area (TMA)
Injury level:	None
Aircraft registration:	OY-LUN
Aircraft make/model:	Champion 8KCAB
Current flight rules:	Visual Flight Rules (VFR)
Operation type:	Instructional
Flight phase:	En route
Aircraft category:	Fixed wing
Last departure point:	Roskilde (EKRK)
Planned destination:	EKRK
Aircraft damage:	None
Engine make/model:	Lycoming AEIO-360-H1B

SYNOPSIS

Notification

All time references in this bulletin are Coordinated Universal Time (UTC).

The Aviation Unit of the Danish Accident Investigation Board (AIB) was notified of the serious incident by the operator on 14-9-2020 at 09:45 hours (hrs).

The AIB notified the Danish Transport, Construction and Housing Authority (DTCHA), the US National Transportation Safety Board (NTSB), the European Aviation Safety Agency (EASA), and the Directorate-General for Mobility and Transport (DG MOVE)) on 23-9-2020 at 06:07 hrs.

The NTSB accredited a non-travelling representative to the AIB safety investigation.

Summary

A ballpoint pen – most likely lost during a previous flight – became stuck in the aileron control mechanism during upset recovery training.

Consequently, aileron deflection required for turning right became limited, and the flight was discontinued.

The serious incident occurred in daylight and under Visual Meteorological Conditions (VMC).

FACTUAL INFORMATION

History of flight

The serious incident occurred during a local VFR instructional flight from Roskilde (EKRK).

Aircraft preflight check and flight control check were performed without remarks.

After take-off, the student pilot and the flight instructor performed upset recovery training in Roskilde Terminal Control Area (TMA).

During manoeuvring, control stick movement towards the right became limited.

It was only possible to bank right using a limited amount of aileron deflection, and the upset recovery training was discontinued.

The aircraft landed in EKRK without any further occurrences.

Injuries to persons

Injuries	*Crew*	*Passengers*	*Others*
Fatal			
Serious			
None	2		

Damage to aircraft

None.

Personal information

License and medical certificate

The flight instructor – male, 51 years – was the holder of a valid Airline Transport Pilot License (ATPL) Airplane (A).

The Single Engine Piston (SEP) (Land) rating was valid until 31-3-2022.

The Flight Instructor (A) rating was valid until 31-3-2023.

The medical certificate (class 1) was valid until 1-11-2020. The medical certificate held the limitation VML (Valid only with correction for defective distant, intermediate and near vision).

Flying experience

	Last 24 hours	Last 90 days	Total
All types	2:00	120:00	14,500:00
This type	2:00	26:00	2,000:00
Landings this type	2	41	3,000

Aircraft information

General information

Manufacturer:	American Champion Aircraft Corporation
Type:	8KCAB
Serial number:	763-96

Airworthiness review certificate:	Valid until 10-4-2021
Engine manufacturer:	Lycoming
Engine type:	AEIO-360-H1B
Maximum take-off mass (MTOM):	885 kilogram
Aircraft total flight hours:	2304 flight hours
Latest maintenance:	2275 flight hours (100-flight hour inspection)

Included in the 100-flight hour maintenance inspection was an inspection of the aircraft fuselage and tail compartment for lost items. According to the operator, lost items were normally found in the tail compartment of the aircraft.

Cockpit enclosure

The aircraft was a two-seat tandem configuration aerobatic aircraft, with flight controls at both the forward and the aft seat.

The aircraft floor, the sidewall panels, and the forward and aft lateral panels separated the cockpit and the cavity in the lower fuselage below floor level (aircraft belly).

Sleeves protected the floor openings for the two control sticks, and the aft rudder pedals connected to the front rudder pedals above floor level.

The floor openings for the front seat rudder pedals were unprotected – see figure 1:

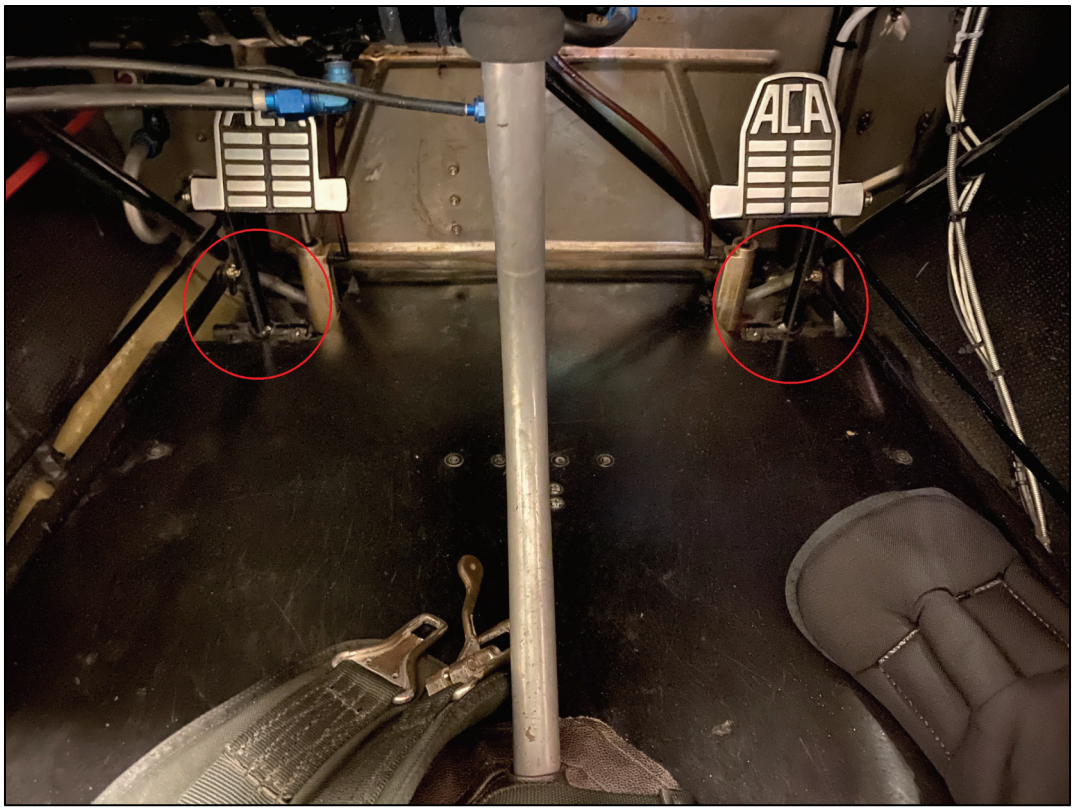

Figure 1. Rudder pedals floor openings (marked by red circles)

A narrow opening existed between the left sidewall panel and the aft lateral panel – see figure 2:

Figure 2. Aft cockpit opening (marked by red circle)

The aircraft manufacturer

Reports concerning control system interference caused the aircraft manufacturer to issue two Service Letters in June 2011 addressing loose items.

After June 2011, the number of reports concerning control system interference substantially declined.

Service letter 435

Service letter 435 addressed added inspection during routine maintenance:

Fuselage Inspection for Loose Items – see appendix 1.

The contracted maintenance organisation for OY-LUN performed inspections according to the Service Letter 435.

Service letter 436

Service letter 436 addressed a modification to the existing floorboard or a replacement with revised floorboards:

Installation Floorboard Extensions or Revised Floorboards – see appendix 2.

Neither of the Service Letter 436 options were incorporated in OY-LUN.

Meteorological information

Aviation Routine Weather Report (METAR)

METAR ekrk 101420z auto 28012kt 250v310 9999 sct036/// 17/08 q1019=

Aerodrome information

General information

Aerodrome Reference Point:	55 35 08N 012 07 53E
Elevation:	146 feet
Runway directions:	03/21, 11/29
Runway dimensions	1500/1799 meter (m) x 31 m
Runway surface:	Asphalt

Aircraft inspection

A technical inspection of the aircraft revealed a ballpoint pen stuck in the right hand no. 6 aileron sector – see figure 3:

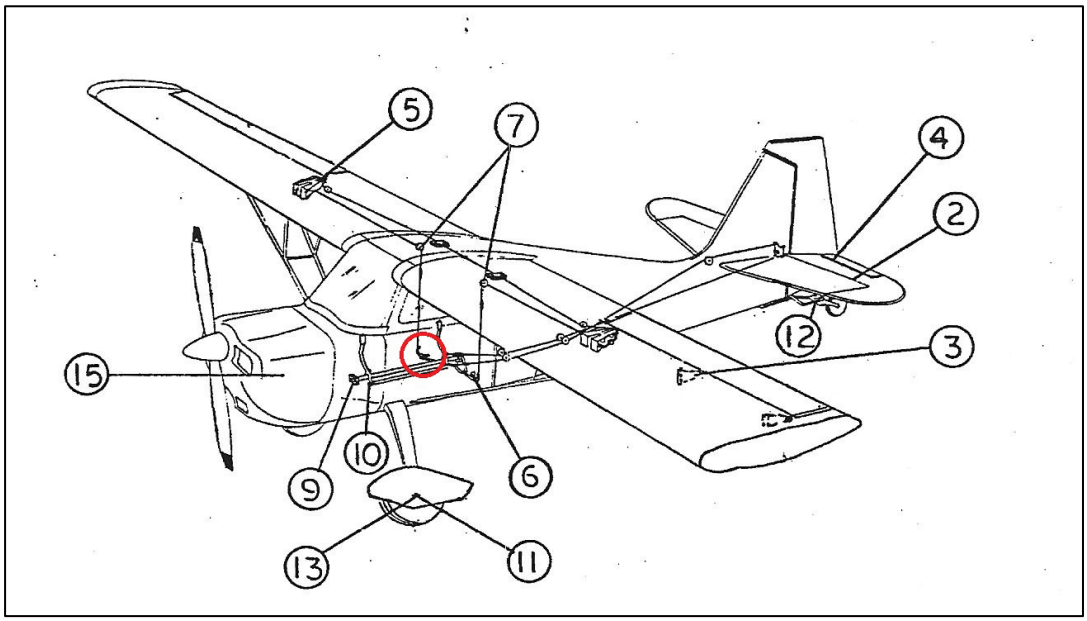

Figure 3. No. 6 aileron sector (right hand side marked by red circle)

The right hand side aileron bellcrank (sector no. 6) enclosure protruded from the aircraft floor, with the empennage control cable running through the enclosure - see figure 4:

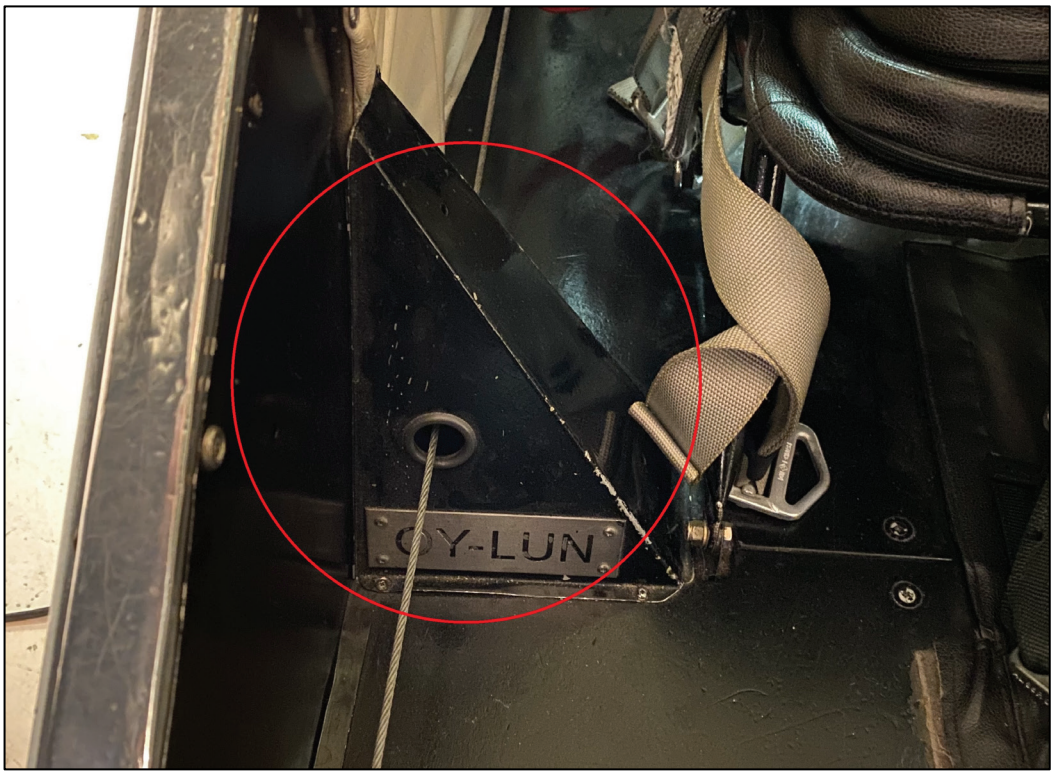

Figure 4. Right hand side aileron bellcrank enclosure (marked by red circle)

The ballpoint pen – see figure 5 and the bellcrank mechanism (no. 6 aileron sector) – see figure 6.

Figure 5. Ballpoint pen

Figure 6. Aileron bellcrank and empennage control cable (seen from above)

Additional information

The ballpoint pen did not belong to neither the flight instructor nor the student pilot.

The operator of the aircraft had never seen the ballpoint pen before, and did not know, how it ended up in the aircraft.

ANALYSIS

General

The following revealed findings had, in the AIB's opinion, no influence on the sequence of events:

- The license and qualifications held by the flight instructor.
- The technical status of the aircraft.
- The preflight check and the flight control check.
- The weather conditions.

The aircraft

The two forward pedal floor openings, openings between the front floorboards and the cabin sidewalls, and the opening between the left sidewall panel and the aft lateral panel allowed access for small loose items from the cockpit to the aircraft belly. In addition, smaller openings like holes for control cables in the aileron bellcrank enclosure etc. existed.

The aircraft manufacturer addressed the gaps between the front floorboards and cabin sidewalls through the Service Letter 436, but neither of these Service Letter 436 modifications were incorporated.

At each 100-flight hour maintenance inspection and annual inspection, the aircraft maintenance organisation included the Service Letter 435 inspection.

Scenario

It seems likely that the ballpoint pen was lost in the aircraft cockpit and entered the aircraft belly through one of the above-mentioned larger openings. This likely occurred after the latest 100-flight hour maintenance inspection and before the serious incident flight.

At the time of the preflight flight control check, the ballpoint pen was most likely not stuck in the aileron bellcrank mechanism, as flight control movement was unrestricted.

During the upset recovery training, manoeuvring with both positive and negative G-forces probably allowed the ballpoint pen to move from the tail compartment to the sector no. 6 aileron enclosure.

Eventually, the ballpoint pen became stuck in the bellcrank mechanism partially blocking aileron movement.

Similar events

The reported number of similar events dating after June 2011 indicated that the likelihood of loose items blocking aileron movement was decreasing. It seems fair to assume that the safety enhancements described in Service Letters 435 and 436 contributed to this decrease.

In addition to adhering to Service Letter 435 and 436, the AIB considers the following as main safety barriers preventing lost or loose items from entering the aircraft belly, and eventually causing flight control interference:

- A preflight check of the aircraft cockpit for loose items.
- A preflight flight control check.
- A limitation/securing of on board personal items.

CONCLUSIONS

Summary

A ballpoint pen – most likely lost during a previous flight – became stuck in the aileron control mechanism during upset recovery training.

Consequently, aileron deflection required for turning right became limited, and the flight was discontinued.

Preventive safety measures

Shortly after the serious incident, the operator of the aircraft published a "safety bulletin" directed to all pilots and instructors, who used the aircraft.

The operator's safety bulletin (in Danish only) described the occurrence and finding of other loose items in the aircraft tail compartment during routine maintenance.

The operator recommended to limit the carriage of potential loose items (glasses, pens, electrical strips, batteries etc.) during flight, or to secure them by straps in order to prevent them from entering the aircraft cavities if dropped during flight.

APPENDIX 1

Return to the aircraft manufacturer

American Champion Aircraft Corp.
Rochester, WI 53167

Page 1 of 1

Service Letter: 435

Date: June 9, 2011

Title: Fuselage Inspection for Loose Items

Effectivity: 7EC, 7ECA, 7GCAA, 7GCBC, 7KCAB, 8KCAB, and 8GCBC models of any serial number

Description: Loose items have been reported to cause control system interference particularly during aerobatic flight. Coins, keys, pens, pencils, ANR batteries, baggage door tools, door release pins, seat adjustment knobs, control knobs, seat belt components, flashlights, maintenance tools, hardware or loose items of similar size may present a hazard. Interference with the flight controls has occurred between the elevator horn and stop and at the aileron sectors.

This service letter provides guidance for inspection of the fuselage for loose items.

Operators are cautioned to avoid aerobatic flight with unsecured items in the cockpit and to inspect the cabin for loose items prior to flight.

Inspection: Inspect for loose items at every 100-hour or annual inspection. Loose items found during inspection must be removed or properly secured.

1. Remove belly pan, elevator horn cover, rear cabin panel, control stick boots and inspection covers as needed. Remove all metal belly panels, if equipped.

2. Visually inspect entire fuselage belly for loose items. Use care to inspect behind and along fabric stringers and structural fuselage members. Loose items tend to migrate to the tail of the aircraft.

3. Visually inspect cabin for loose items.

APPENDIX 2

Return to the aircraft manufacturer

American Champion Aircraft Corp.
Rochester, WI 53167

Page 1 of 2

Service Letter: 436

Date: June 10, 2011

Title: Installation Floorboard Extensions or Revised Floorboards

Effectivity: 7EC, 7ECA, 7GCAA, 7GCBC, 7KCAB, 8KCAB, and 8GCBC models manufactured before July 1, 2011 as indicated by the aircraft data plate. Aircraft manufactured after July 1, 2011 comply with this service letter.

Description: Loose items have been reported to cause control system interference particularly during aerobatic flight. Gaps between the front floorboards and cabin sidewalls may allow loose items to enter the airplane belly.

This service letter provides guidance for either: A) installing floorboard extensions in the left and right forward cabin; or B) replacing the front floorboards with a revised version. Both options provide improved fit with the forward cabin sidewall.

Procedure:

Option A – Floorboard Extensions (See Figure 1)

1. Lift carpet to facilitate installation of floorboard extensions. It may be necessary to remove staples securing the carpet to the floorboards.
2. Remove floorboard clips where noted.
3. Position 3-1793-1 floorboard extensions against sidewall.
4. Install 0162605 fasteners through floorboard extensions, floorboards, and fuselage tabs.
5. Match drill ∅.098 holes through floorboard. Secure floorboard extensions with AS6-6-6SP screws.
6. Secure carpet with 5/16" staples.

Table I: Parts Required - Option A (Order from American Champion as necessary)

Part Number	Description	Quantity
3-1793-1	Floorboard Extension	1 Left / 1Right
0162605	Fastener	2
AS6-6-6SP	Screw	10
5/16"	Staple	As Required

American Champion Aircraft Corp.
Rochester, WI 53167

Page 2 of 2

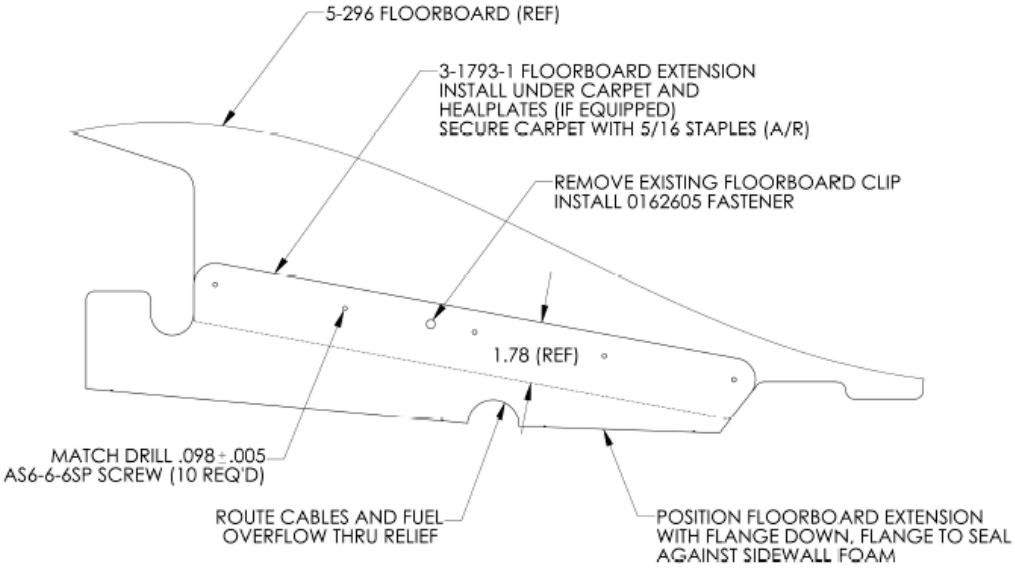

Figure 1, Installation - 3-1793-1 Floorboard Extension
(Front Left Side Shown)

Option B – Revised Front Floorboards

Revised front floorboards may be installed in place of the floorboard extensions. Install revised front floorboards in accordance with drawing 7-1269, Installation Interior Cabin Panels, rev. P or later.

Table II: Parts Required - Option B (Order from American Champion as necessary)

Part Number	Description	Quantity
5-296	Front Floorboard (rev. T or later)	2 (1 7GCBC & 8GCBC)
5-296-1	Front Floorboard - w/ Flaps (rev. T or later)	(1 7GCBC & 8GCBC)
0162605	Fastener	13
AN526-1032R10	Screw	1
AN365-1032	Nut	1
5/16"	Staple	As Required